ORION 920 DX

Rapiscan systems
An OSI Systems Company

DATASHEET

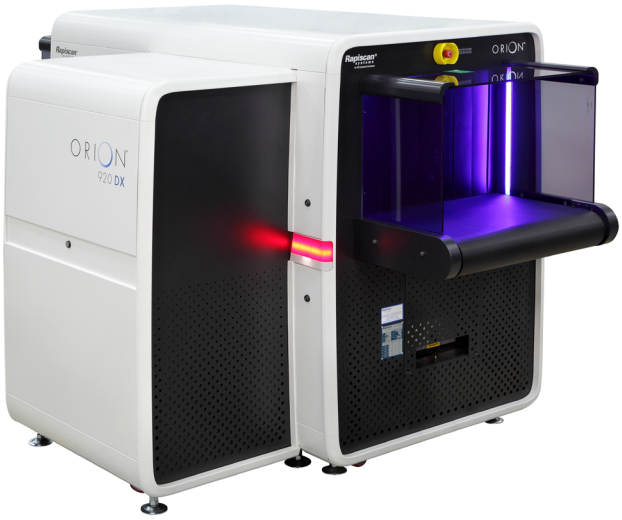

The new 920DX is a High Performance 640mm by 430mm tunnel dual view checkpoint screening system with excellent threat detection alert capabilities.

INDUSTRY BEST RESOLUTION

EXPLOSIVES & NARCOTICS DETECTION

LOW DENSITY IMAGE ENHANCEMENT

MATRIXING, NETWORKING & REMOTE VIEWING

EU 2015/1998 COMPLIANT

US TSA ACSTL QUALIFIED

EU ECAC C1 APPROVED

EU ECAC LEDS APPROVED

SPECTRUM 4-COLOR IMAGING

920DX can present images to the operator in the Classic 4-color and the new proprietary Spectrum 4-color (SP4) option providing superior image, allowing improved security by quick and accurate identification of threats and increase in throughput.

DUAL MODE AUTO Z_{EFF}

The Dual Mode Z_{eff} feature aids the operator in the identification of organic materials, either in Range Mode which highlights areas based on operator selected Z-effective values of 7, 8 or 9, or in Interactive Mode which gives the operator the option to display the Z-effective number of a selected pixel.

EXPLOSIVES AND NARCOTICS DETECTION

Target and NARCScan are designed to detect a wide range of explosives and narcotics respectively in real time during the scanning process by marking a potential threat on the X-ray image. Rapiscan® Systems detection algorithms are based on regulatory approved material analysis techniques.

EUROPEAN AVIATION COMPLIANCE

920DX is in full compliance with the latest requirements of Commission Implementing Regulation (EU) 2015/1998 of 5 November 2015 laying down detailed measures for the implementation of the common basic standards on aviation security.

YOUR AUTHORISED DISTRIBUTOR

SELMATEC

NORWAY
+47 63 92 84 00
sales@selmatec.no
www.selmatec.no

DENMARK
+45 48 18 90 33
sales@selmatec.dk
www.selmatec.no

SWEDEN
+ 46 19-670 81 00
sales@selmatec.se
www.selmatec.se

FINLAND
+ 358 50 4093175
sales@selmatec.fi
www.selmatec.fi

Dimensions are in mm[in]

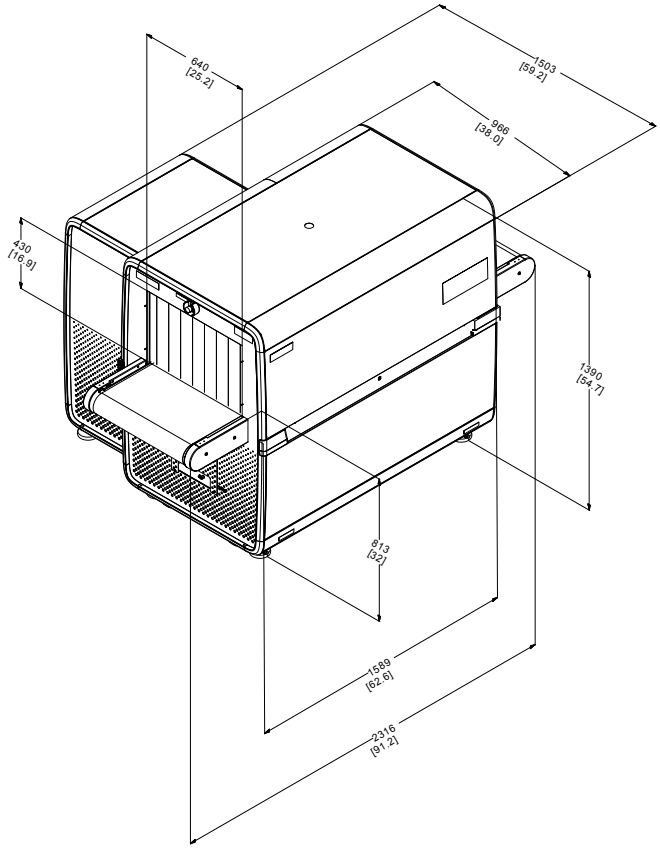

PHYSICAL SPECIFICATIONS [1]

DIMENSIONS	L	2,316 mm (91.2 in)
	W	1,503 mm (59.2 in)
	H	1,390 mm (54.7 in)
TUNNEL SIZE	W	640 mm (25.2 in)
	H	430 mm (16.9 in)
CONVEYOR HEIGHT		813 mm (32 in.)
WEIGHT (NET)		897 Kg (1978 lbs)

ENVIRONMENT & POWER

STORAGE TEMPERATURE	-20°C to 50°C
OPERATING TEMPERATURE	0°C to 40°C
RELATIVE HUMIDITY	5 to 95% non-condensing
SYSTEM POWER	100/110/120/200/208 /220/230/240 VAC ±10%

PERFORMANCE [2]

CONVEYOR SPEED[1]	0.22 m/sec (43.3 ft/min)
CONVEYOR LOAD[1]	165 Kg (364 lbs)
STEEL PENETRATION	41 mm typical, 40 mm standard
WIRE RESOLUTION	41 AWG typical, 40 AWG standard
SPATIAL RESOLUTION	0.8mm Vertical, 0.8mm Horizontal

X-RAY GENERATOR

ANODE VOLTAGE	160kV
ORIENTATION	Vertically Upward and Horizontal

KEY FEATURES AND OPTIONS

- Explosive threats, narcotics & density alerts
- Spectrum 4
- 17 Image processing functions
- SINERGY low density enhancement
- Dual Mode Z-effective
- CrystalClear™
- Automatic, Enhanced Image Archiving
- Remote Status Monitoring
- Remote Archive Review
- Multi-System Alarm Resolution Network
- Multiplexing and Matrixing
- Tray Return System Compatible
- 13 Languages
- 64-bit Operating System

ScanOS®

ScanCORE ScanAI ScanORIGIN

Rapiscan® systems
An OSI Systems Company

1. Approximate Values 2. Stated performance as measured by Rapiscan® Imaging Validation Test Kit

Rapiscan® Systems is ISO 9001:2015 Certified

Rapiscan® Systems' cabinet X-ray products comply with all applicable U.S. FDA and equivalent international regulatory agency requirements, contained in the cabinet X-ray radiation safety performance standard [21 CFR 1020.40] and the general performance standard [21 CFR Part 1010] as well as IEC standard 61010-2-091. Rapiscan® baggage and parcel inspection systems radiation emission leakages are well below the required regulatory limits with less than 1µSv/hr at 10 cm from all surfaces of cabinet X-ray.

With continual development of our products Rapiscan® Systems reserves the right to amend specifications without notice. Product pictures are for general reference. Please note that due to US laws and regulations, not all Rapiscan® products are available for sale in all countries without restriction. Please contact your Rapiscan® Systems sales representative for more information.